Dimensions

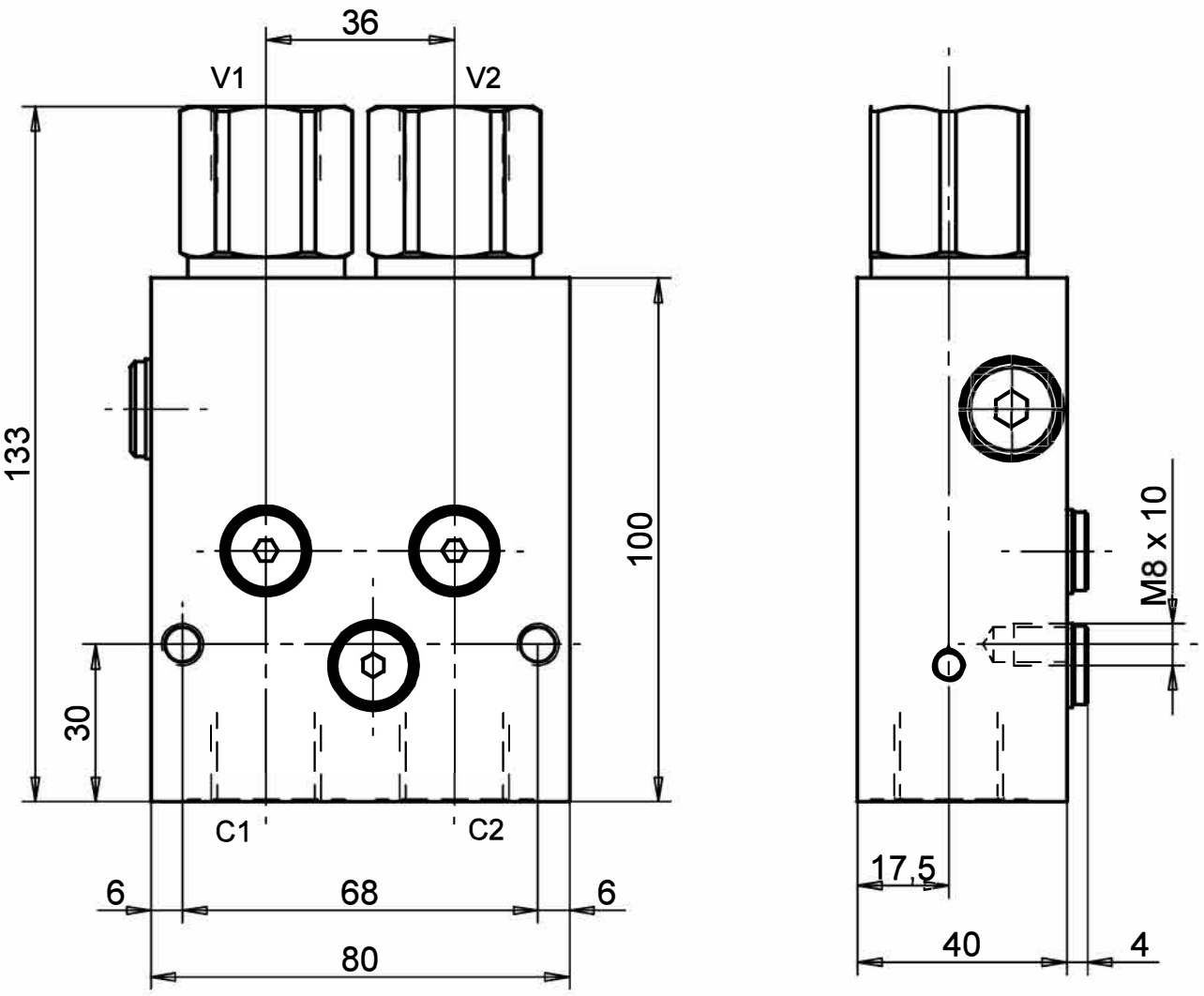

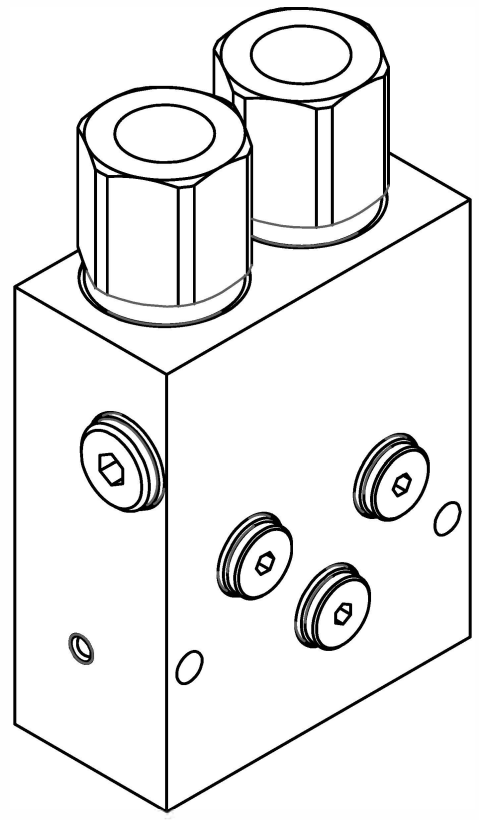

Hydraulic Symbol

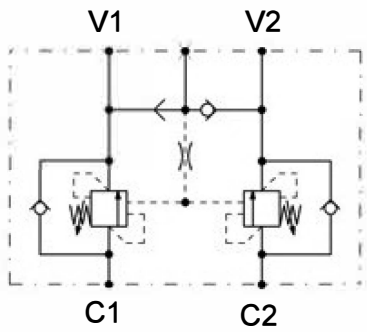

Curves

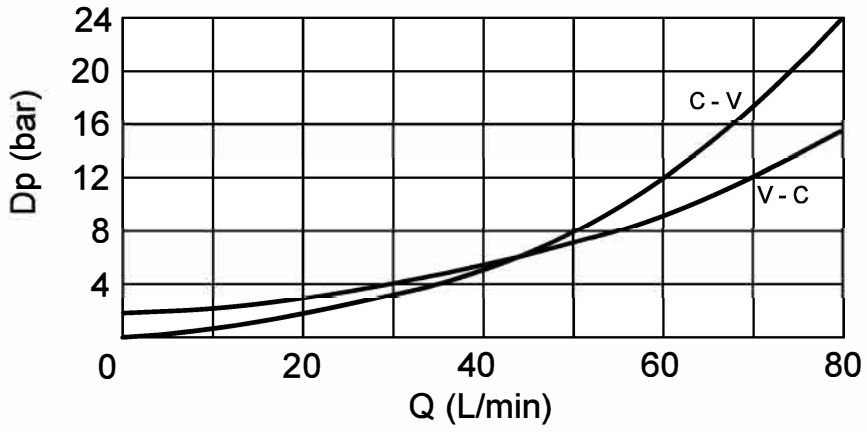

Features

Max Flow	80 lpm
Max Pressure	350 bar
Pilot Ratio	4,2:1 Standard
Std. Pressure range	100 - 350 bar

Materials: Zinc plated steel manifold, hardened steel inner parts.

Ordering Code

CBDLIL 03