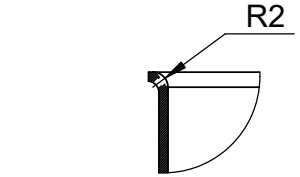


View B
Scale 1 : 1

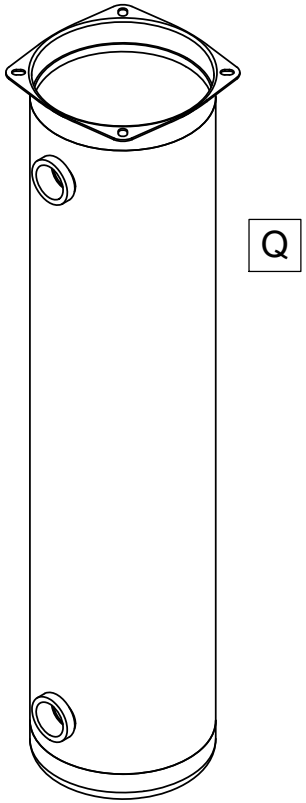


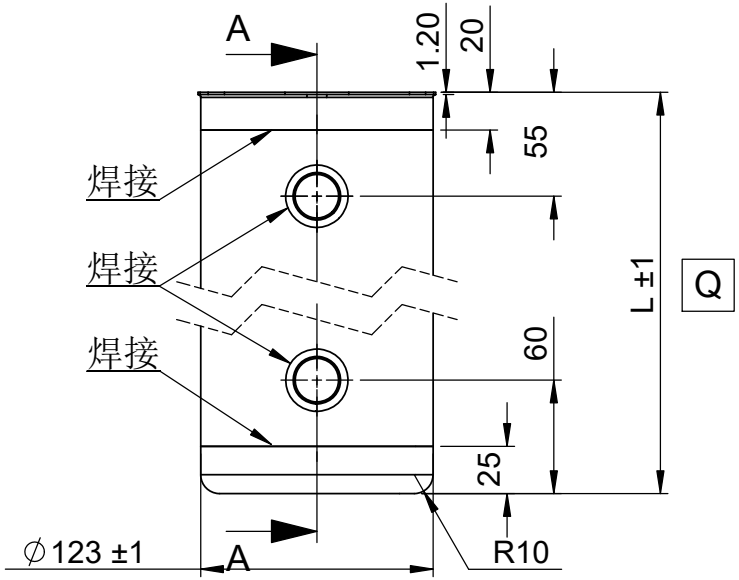


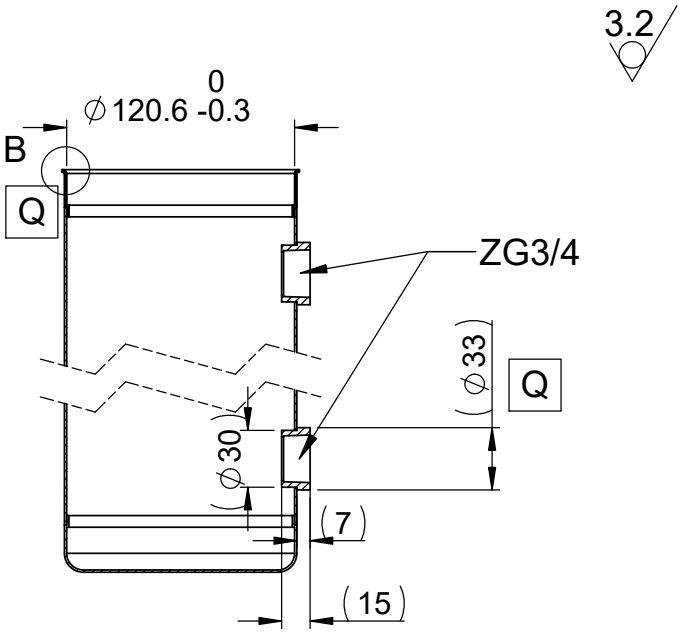


View A-A
Scale 1 : 4

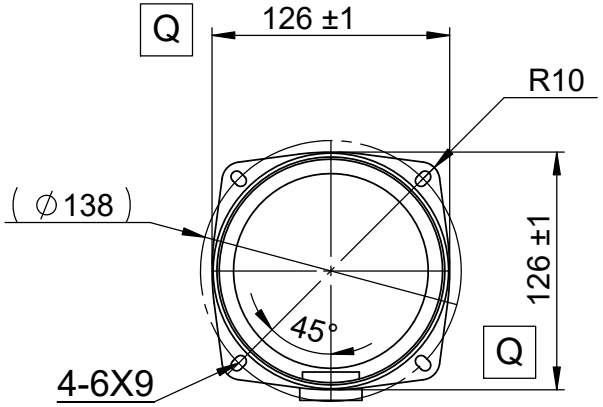


| P/N | | MS1 | MS2 | MS3 | MS4 | MS5 | MS6 | MS7 | MS8 |
|---|---|---|---|---|---|---|---|---|---|
| Net Volume | L | 1.7 | 2.3 | 2.9 | 3.4 | 4 | 4.6 | 5.1 | 6.3 |
| Usable | L | 1 | 1.4 | 2 | 2.4 | 2.9 | 3.3 | 3.8 | 4.7 |
| Length "L" | mm | 150 | 200 | 250 | 300 | 350 | 400 | 450 | 550 |

MOCEN FLUID POWER & CONTROLS

Undeclared linearity and angle Dimensional tolerance（mm）
>0 ±0.05
>6 ±0.1
>30 ±0.15
>120 ±0.2
>400 ±0.3
>1000±0.5

| | | | | | | | |
|---|---|---|---|---|---|---|---|
| name | Steel Tank | Designer | JCP | Weight(g) | Number | View Scale | Material: |
| | | Revision | | | 1 | | |
| model | MS Series | Ratify | | Page | pages in total | | Revision A-01 |
| | | DATE | 2013-12-05 | | | | A-01 |